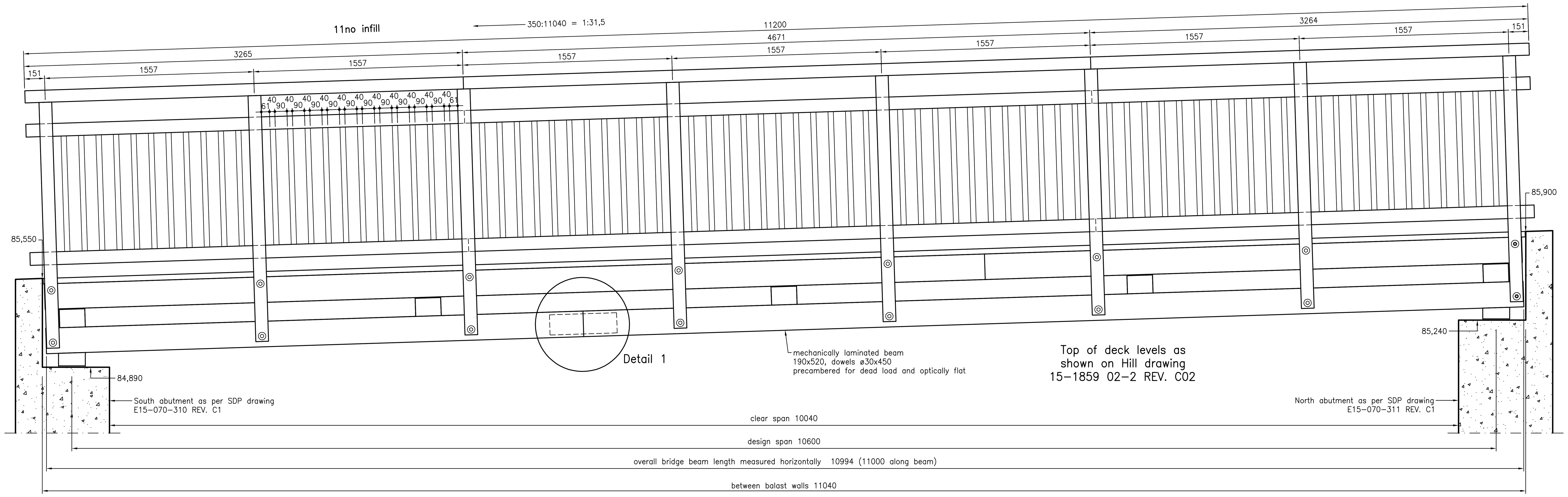

Elevation 1:20

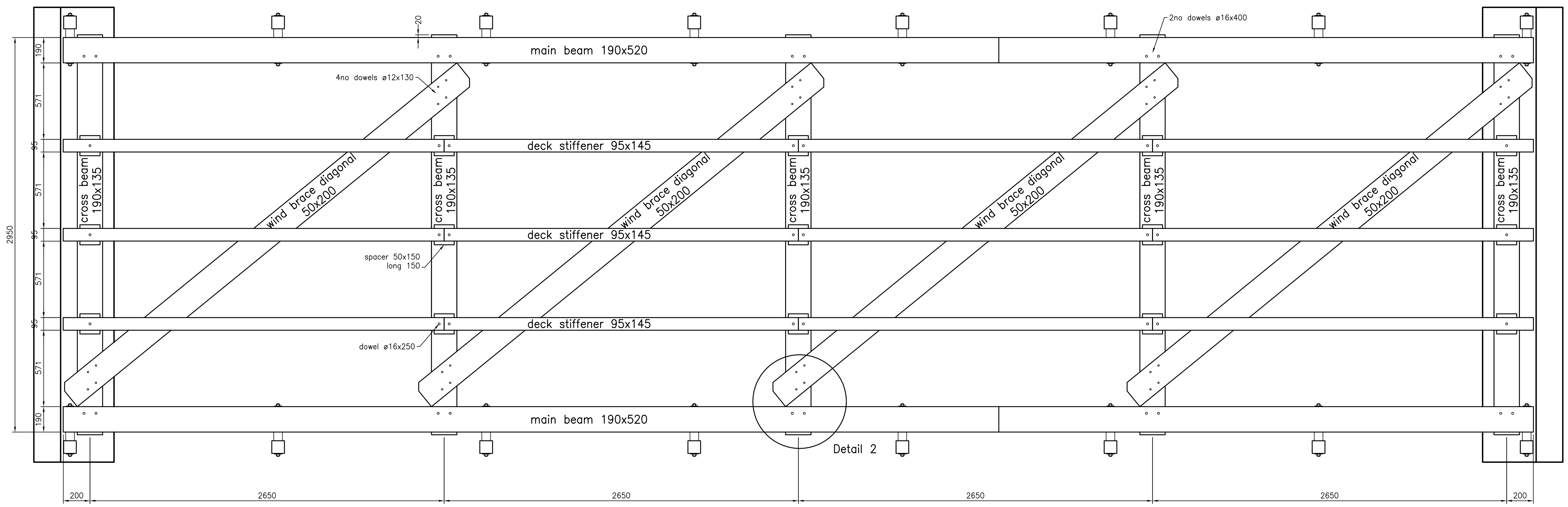

Plan without deck boards 1:20

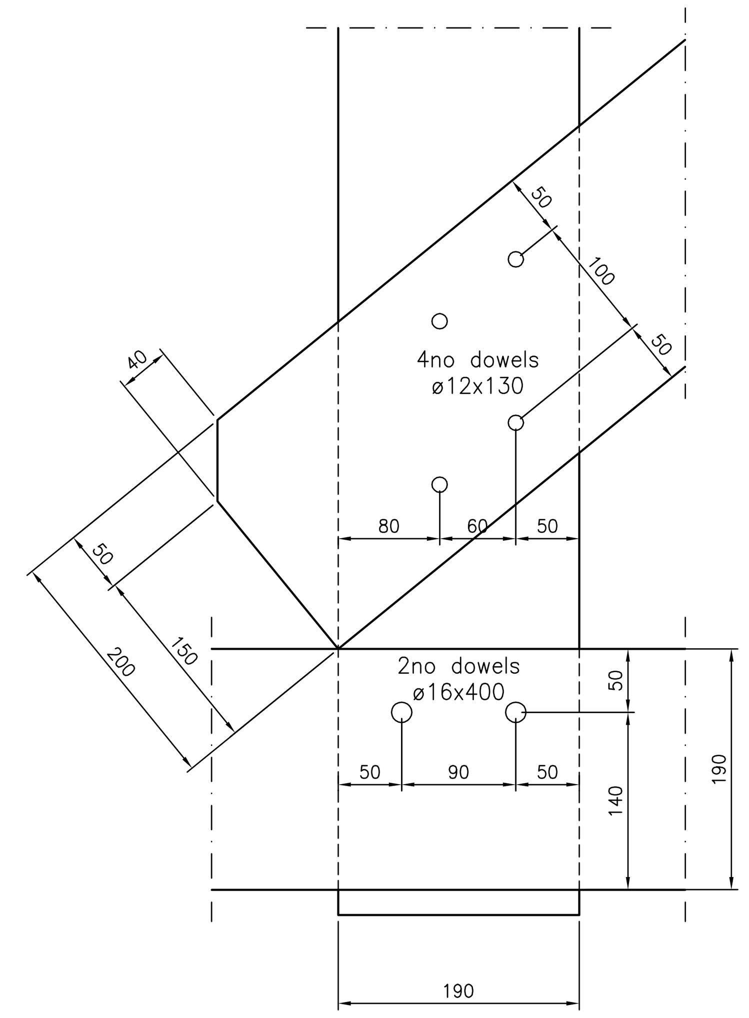

Detail 2 1:5

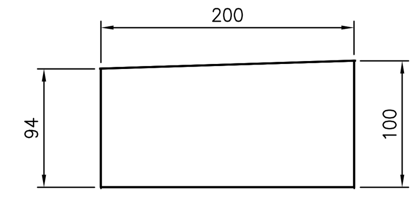

Bearing timber South abutment 1:5

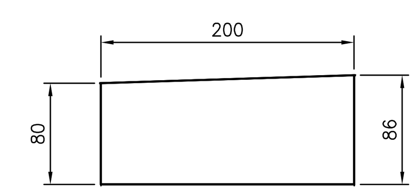

Bearing timber North abutment 1:5

Class: Pedestrian / pointload.
Load: 5 KN/m2 / 10 KN.
Timber: Ekki FSC Mix 70%, certificate nr. RA–COC–005535AV.
Steelparts: S235 galvanised, unless mentioned otherwise,
bolts / threaded rods Grade 8.8, screws SS304.
All dimensions in mm.

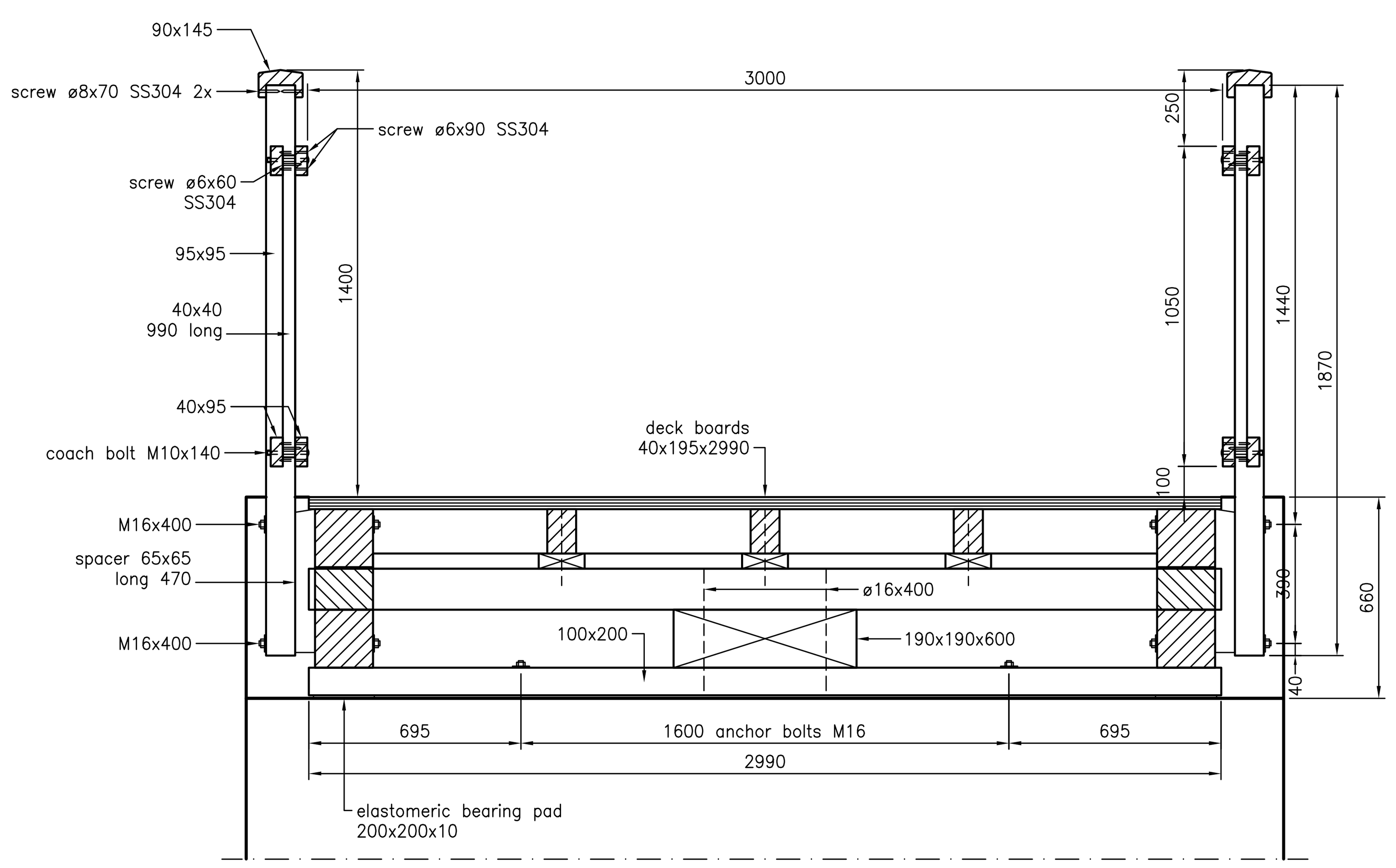

Section 1:20

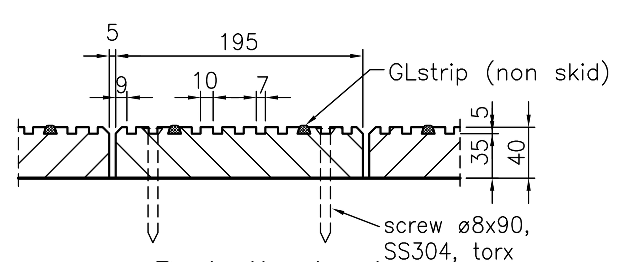

Detail deck 1:5

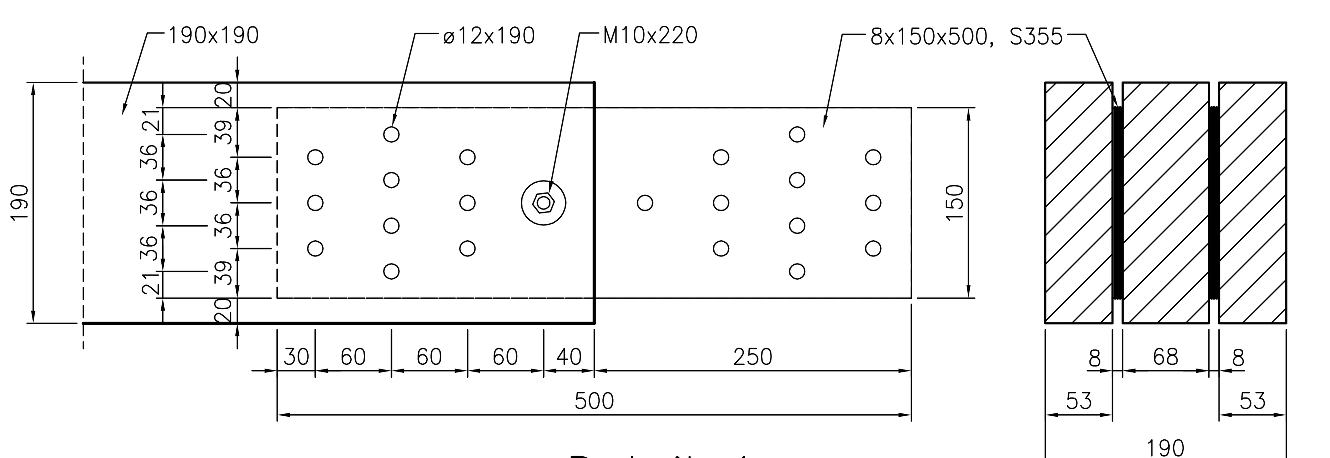

Detail 1 1:5

Safety, Health and Environmental information

In addition to the hazards/risk normally associated with the types of work detailed on the drawing, please note the following:

Construction
–No risks during construction have been identified that could not reasonably have been foreseen by a competent contractor.
(it is assumed that all works will be carried out by a competent Contractor working, where appropriate, to an agreed method statement)

Residual Risks:
None

Nr.	Date issue	Design	Drawn	Checked	Description revision/addition
3	09-09-2016		KW		Spacing between vertical infill rails reduced from 100 to 90mm
2	07-09-2016		KW		Bearing details adjusted and bridge levels added
1	24-08-2016		KW		Type of parapet changed from type B to type EE

Principal: Hill Partnerships Limited, Bicester	Date approval:
	Date issue: 27-07-2016
Name structure: Bicester Eco Town Phase 2 Foot Bridges	Design:
	Drawn: KW
Part structure: Bridge ONE — General Arrangement with details	Checked: as shown@A1
	Scale:
	Drawingnr. - part: E5231-20160156-01
	160945
	Sheet:
	PREFAZO® Type 2

SHS Bridges & Structures
SARUM HARDWOOD STRUCTURES LTD
inc. MAT & TIMBER SERVICES
Unit 1b, Chilbolton Down Farm
STOCKBRIDGE, Hampshire. SO20 6BU
Tel: 01264 811600 + Fax: 01264 810600
info@sarumhardwood.co.uk
www.sarumhardwood.co.uk

FSC® C007915 The mark of responsible forestry www.fsc.org

"This document contains information proprietary to GROOT LEMMER B.V. Any disclosure or use of the proprietary information or reproduction of this document is expressly prohibited except as GROOT LEMMER B.V. may otherwise agree in writing"