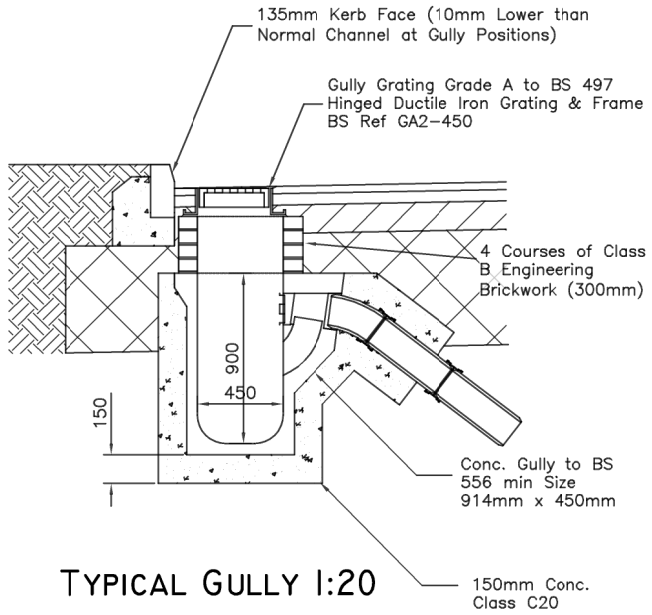

TYPICAL GULLY 1:20

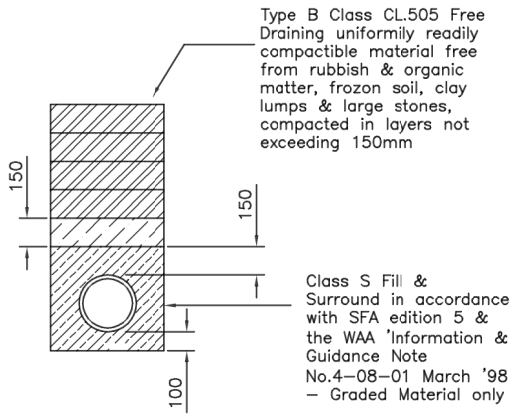

PIPE BEDDING 1:20

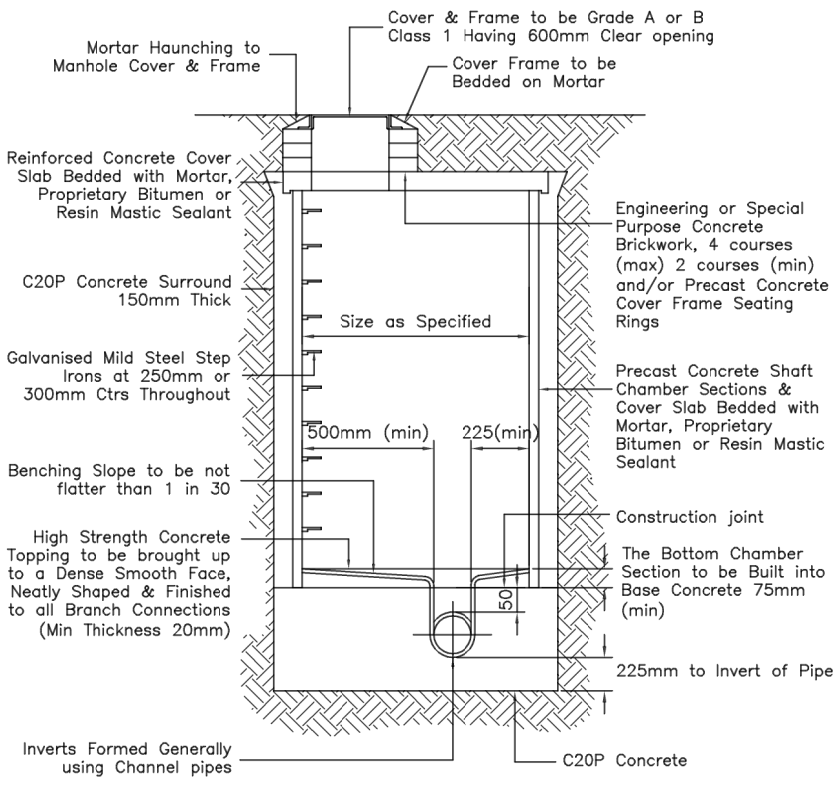

TYPICAL MANHOLE 1:20

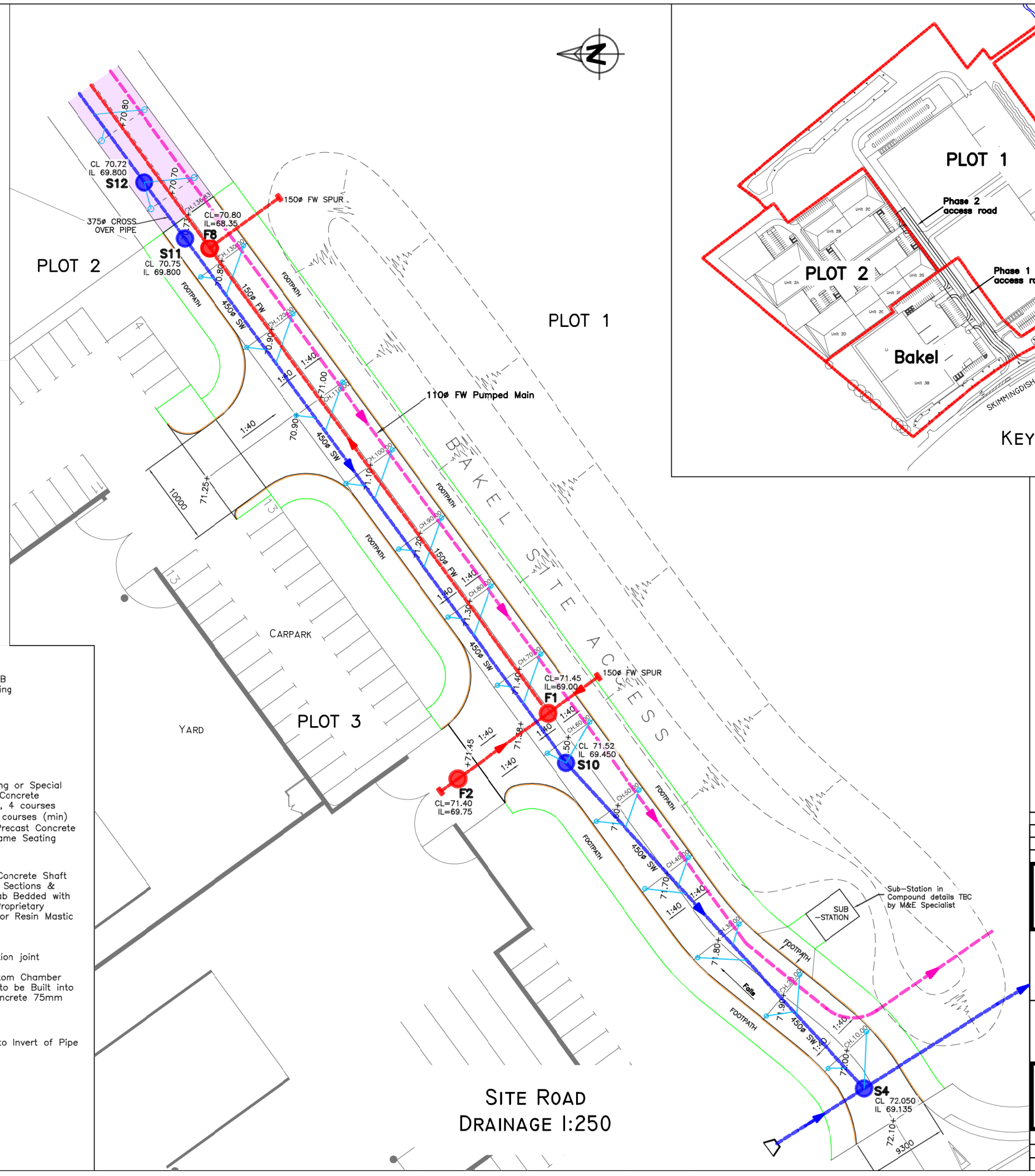

SITE ROAD DRAINAGE 1:250

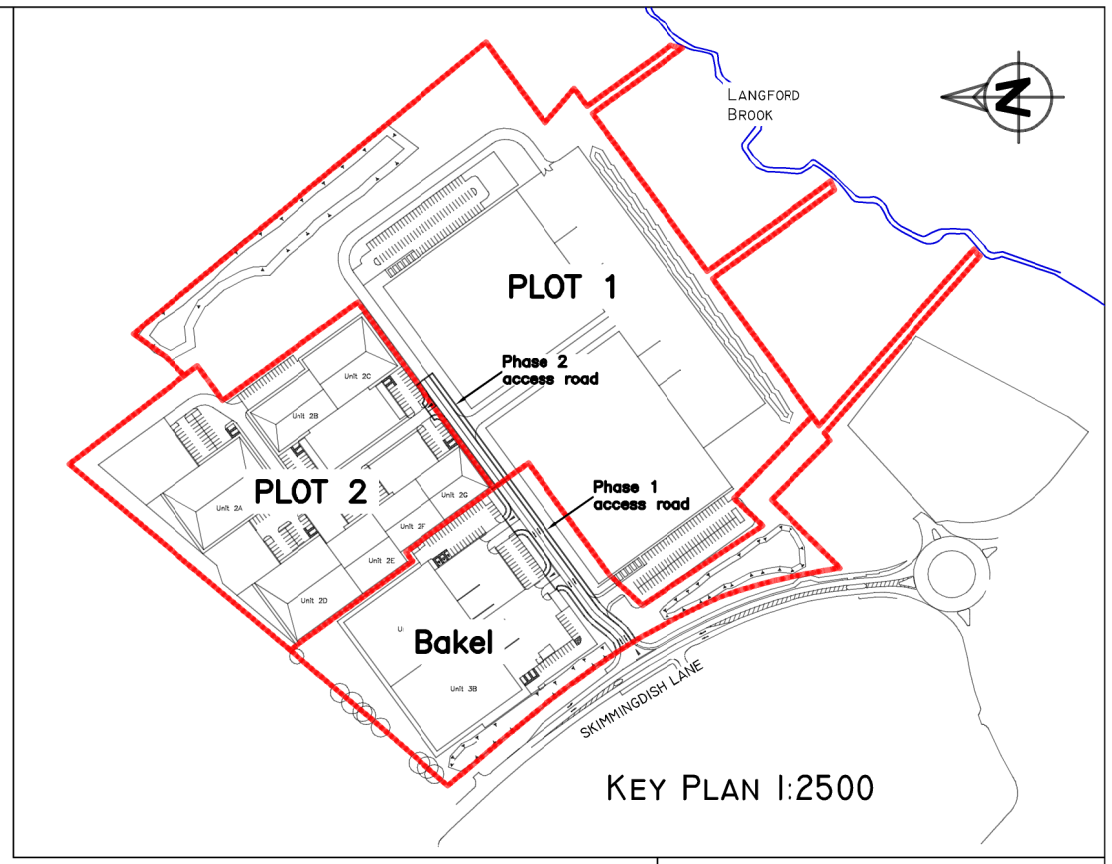

KEY PLAN 1:2500

CONSTRUCTION

D	11.12.17	Construction Issue
C	29.10.17	Road levels revised
B	21.08.17	HB2 kerbs shown
A	31.07.17	Updated to latest Architects plan

BAKEL,
Skimmingdish Lane,
Link 9 – Bicester

CLIENT:
ALBION LAND (2013) LTD

BAKEL
Site Road – Drainage

BAILEY JOHNSON HAYES
Consulting Engineers
ST.ALBANS: Suite 4, Phoenix House, 63 Camfield Rd, ST.ALBANS, Herts AL1 5FL
MANCHESTER: Grange House, John Dalton Street, MANCHESTER, M2 6FW

Scale	1:250, 20, 10
Date	05.06.17
Drawn	JNG

S1340–E–06D