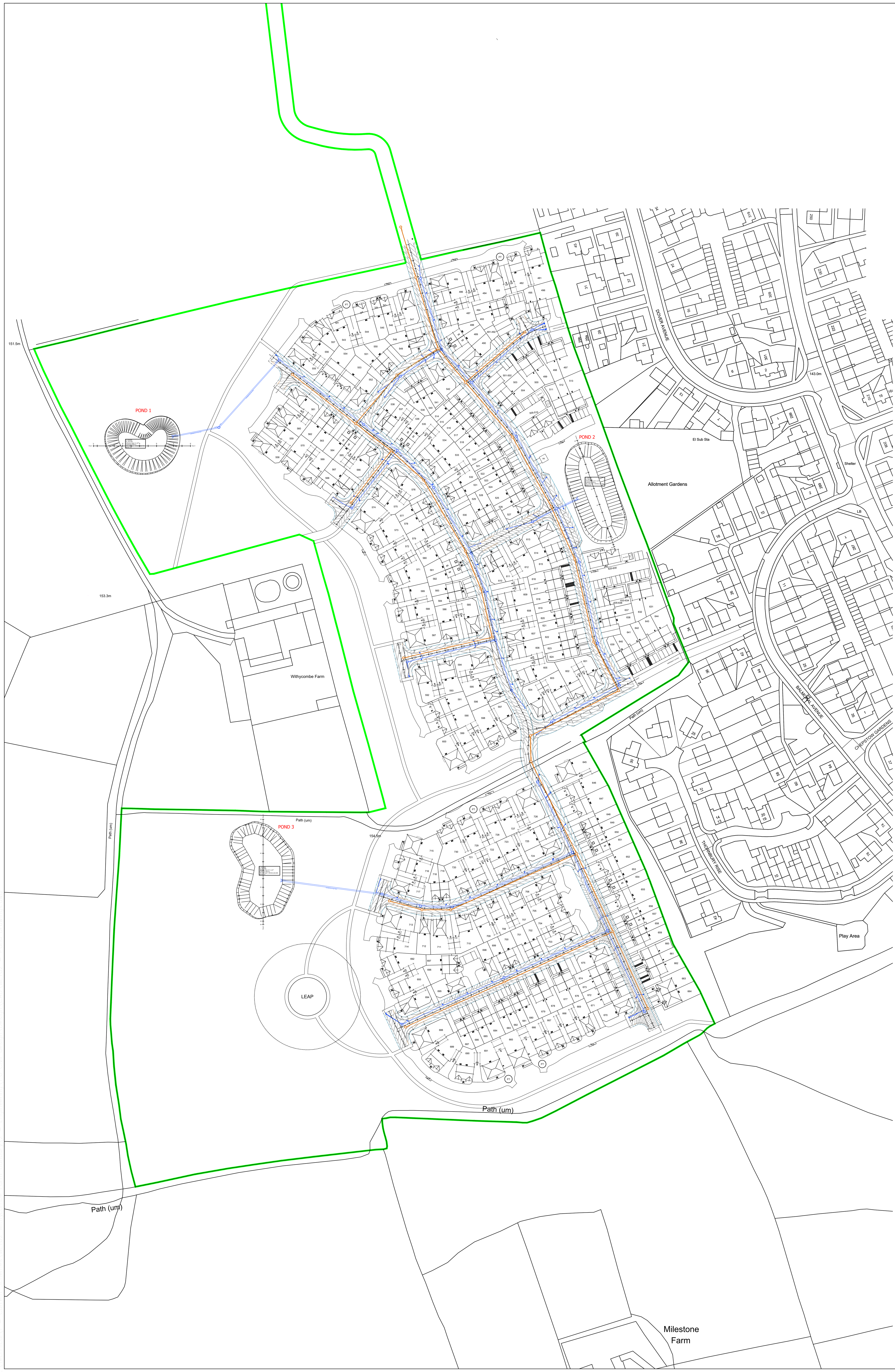


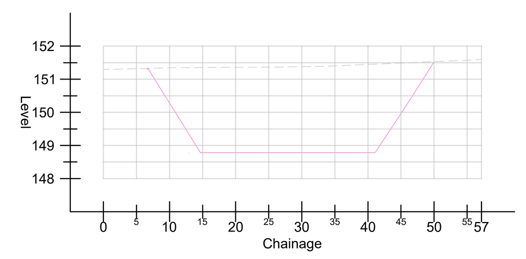


POND 1

| Chainage | 0 | 5 | 10 | 15 | 20 | 25 | 30 | 35 | 40 | 45 | 50 | 55 | 57 |
|---|---|---|---|---|---|---|---|---|---|---|---|---|---|
| Existing Levels | 151.297 | 151.319 | 151.345 | 151.354 | 151.361 | 151.367 | 151.380 | 151.406 | 151.447 | 151.488 | 151.531 | 151.575 | 151.596 |
| Proposed Levels | | | 150.276 | 148.808 | 148.808 | 148.808 | 148.808 | 148.808 | 148.808 | 149.971 | | | |

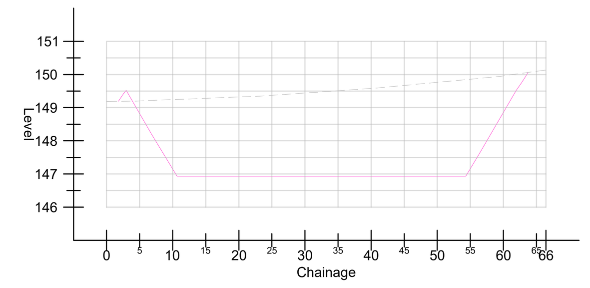


POND 2

| Chainage | 0 | 5 | 10 | 15 | 20 | 25 | 30 | 35 | 40 | 45 | 50 | 55 | 60 | 65 | 66 |
|---|---|---|---|---|---|---|---|---|---|---|---|---|---|---|---|
| Existing Levels | 149.183 | 149.204 | 149.243 | 149.283 | 149.322 | 149.373 | 149.442 | 149.511 | 149.581 | 149.671 | 149.764 | 149.858 | 149.960 | 150.098 | 150.137 |
| Proposed Levels | | 148.816 | 147.142 | 146.954 | 146.954 | 146.954 | 146.954 | 146.954 | 146.954 | 146.954 | 146.954 | 147.161 | 148.858 | | |

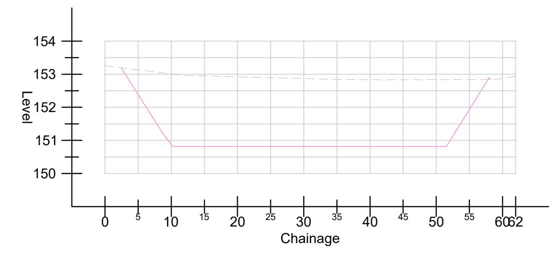


POND 3

| Chainage | 0 | 5 | 10 | 15 | 20 | 25 | 30 | 35 | 40 | 45 | 50 | 55 | 60 | 62 |
|---|---|---|---|---|---|---|---|---|---|---|---|---|---|---|
| Existing Levels | 153.253 | 153.133 | 153.012 | 152.945 | 152.919 | 152.893 | 152.867 | 152.841 | 152.834 | 152.833 | 152.836 | 152.839 | 152.872 | 152.935 |
| Proposed Levels | | 152.385 | 150.875 | 150.806 | 150.806 | 150.806 | 150.806 | 150.806 | 150.806 | 150.806 | 150.806 | 151.933 | | |

TABLE T1

| HEADWALL | PIPE SIZE | INVERT | TOP OF HW |
|---|---|---|---|
| HW1 | 500mm | 148.808 | 149.808 |
| HW2 | 500mm | 146.954 | 147.954 |
| HW3 | 300mm | 150.806 | 151.806 |

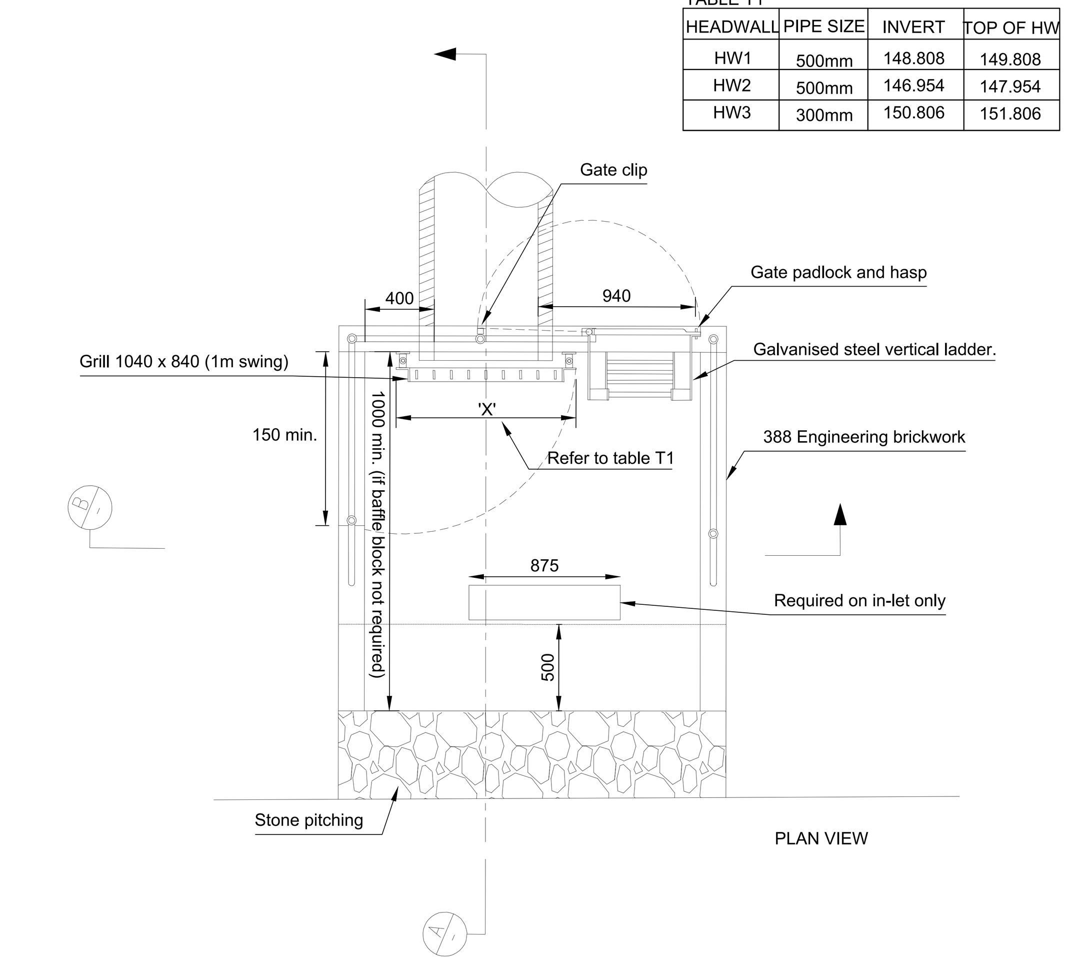


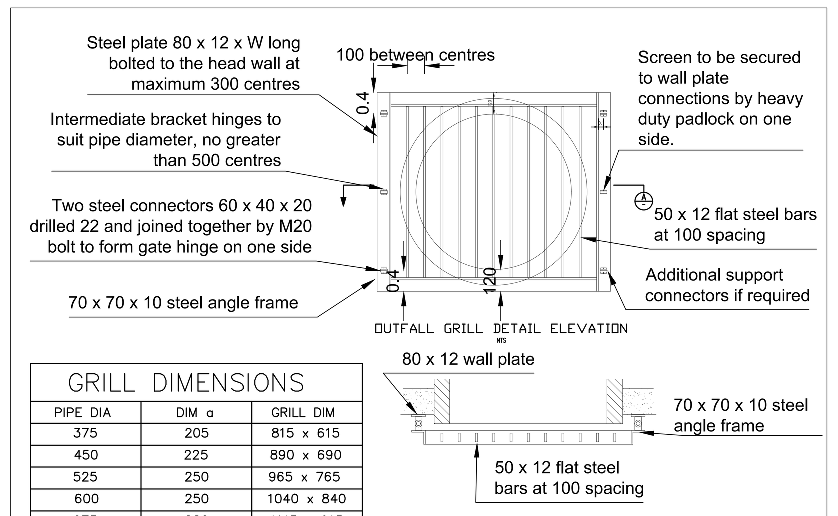


GRILL DIMENSIONS

| PIPE DIA | DIM a | GRILL DIM |
|---|---|---|
| 375 | 205 | 815 x 615 |
| 450 | 225 | 890 x 690 |
| 525 | 250 | 965 x 765 |
| 600 | 250 | 1040 x 840 |
| 675 | 280 | 1115 x 915 |
| 750 | 300 | 1190 x 990 |
| 825 | 320 | 1265 x 1065 |
| 900 | 340 | 1340 x 1140 |

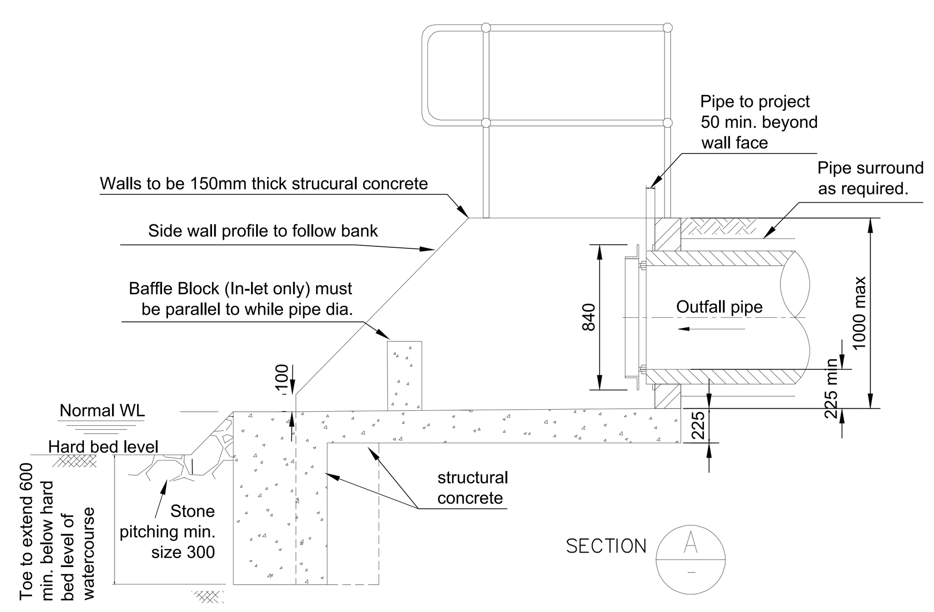


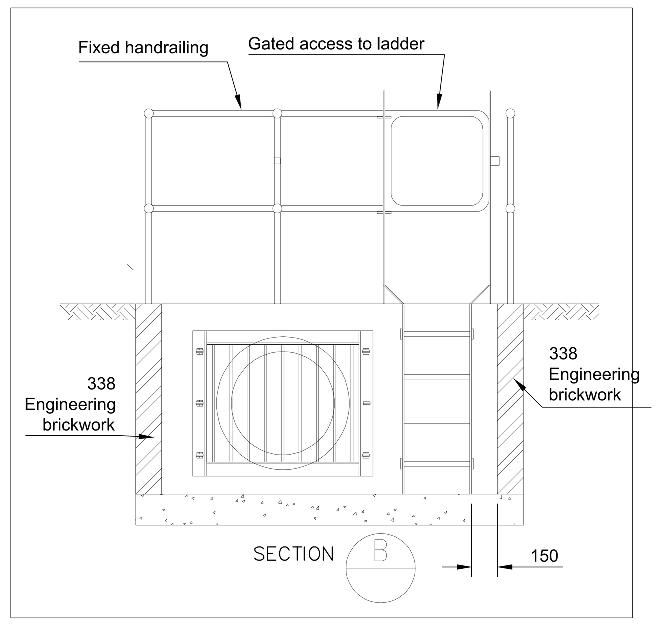



J S BLOOR (SERVICES) LIMITED
ASHBY ROAD, MEASHAM, SWADLINCOTE,
DERBYSHIRE DE12 7JP
TELEPHONE 01530 270100 FACSIMILE 01530 272006

THIS DRAWING AND THE BUILDING WORKS DEPICTED ARE THE COPYRIGHT OF J.S.BLOOR (SERVICES) LIMITED AND MAY NOT BE REPRODUCED OR AMENDED EXCEPT BY WRITTEN PERMISSION. NO LIABILITY WILL BE ACCEPTED FOR AMENDMENTS MADE BY OTHER PERSONS.
DO NOT SCALE THIS DRAWING, USE FIGURED DIMENSIONS ONLY, IF IN DOUBT ASK.

THIS DRAWING IS TO BE READ IN CONJUNCTION WITH SEPARATE GROUP / SITE SPECIFIC CONSTRUCTION NOTES AND MATERIALS SPECIFICATION.


Notes:
1. Do not scale from this drawing.
2. All dimensions in metres.
3. All levels relate to ordnance datum. Note all levels to units are DPC including garages.
5. Any discrepancies with any of the drawings shall be reported to Bloor Homes.

| Rev. | Description | By | Date |
|---|---|---|---|
| - | - | - | - |

Suitability.
APPROVAL

Withycombe Farm
Banbury
Oxfordshire

## Pond Details

DATE: **17/01/2024**
SCALE: **NTS**
DRAWN: **RB**
CHECKED: **JB**

BLOOR HOMES®

Drawing No. WE102-EN-121