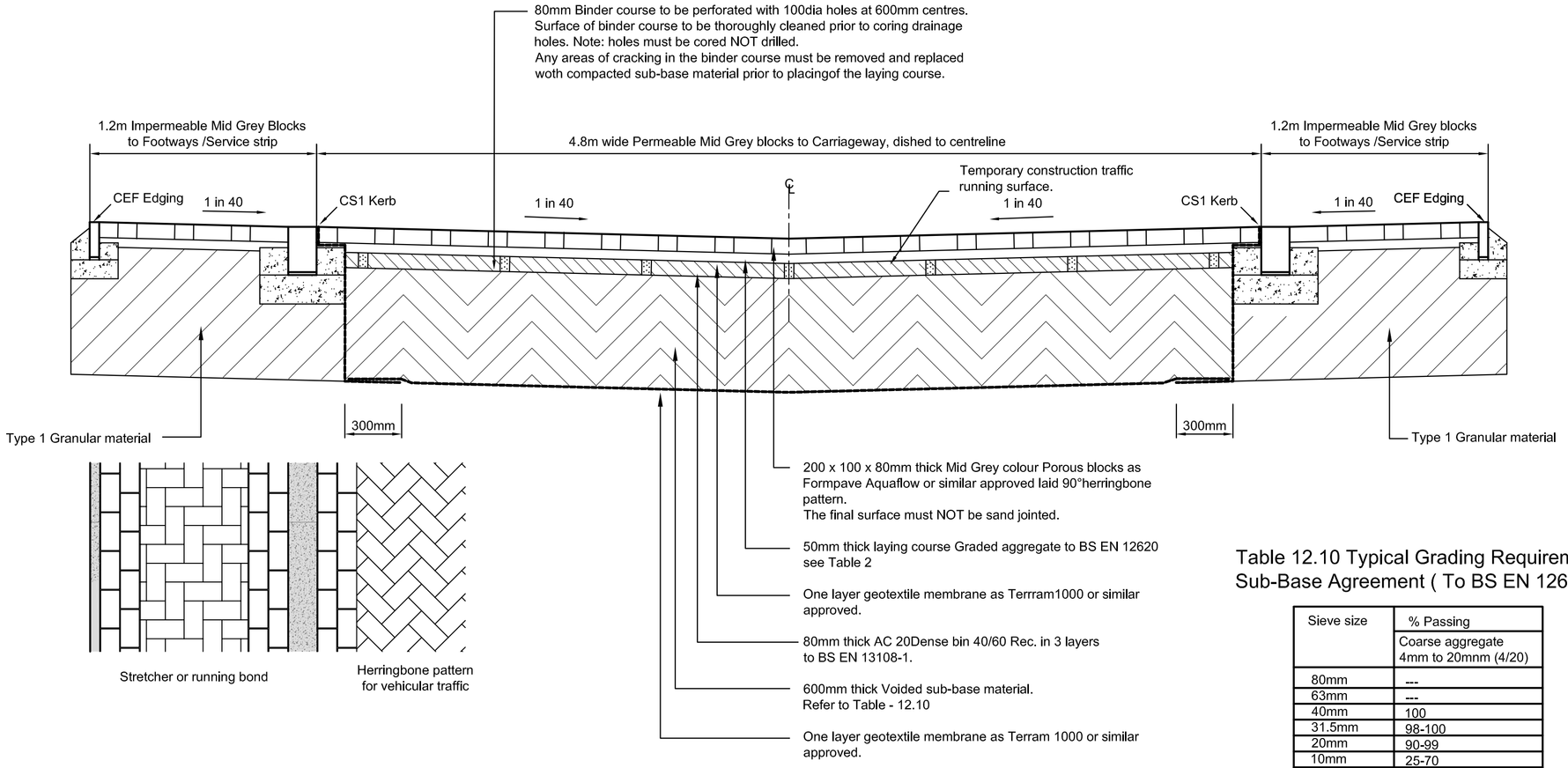

Porous Road Construction

Table 12.10 Typical Grading Requirement for Sub-Base Agreement (To BS EN 12620)

Sieve size	% Passing Coarse aggregate 4mm to 20mmm (4/20)
80mm	---
63mm	---
40mm	100
31.5mm	98-100
20mm	90-99
10mm	25-70
4mm	0-15
2mm	0-5
1mm	---

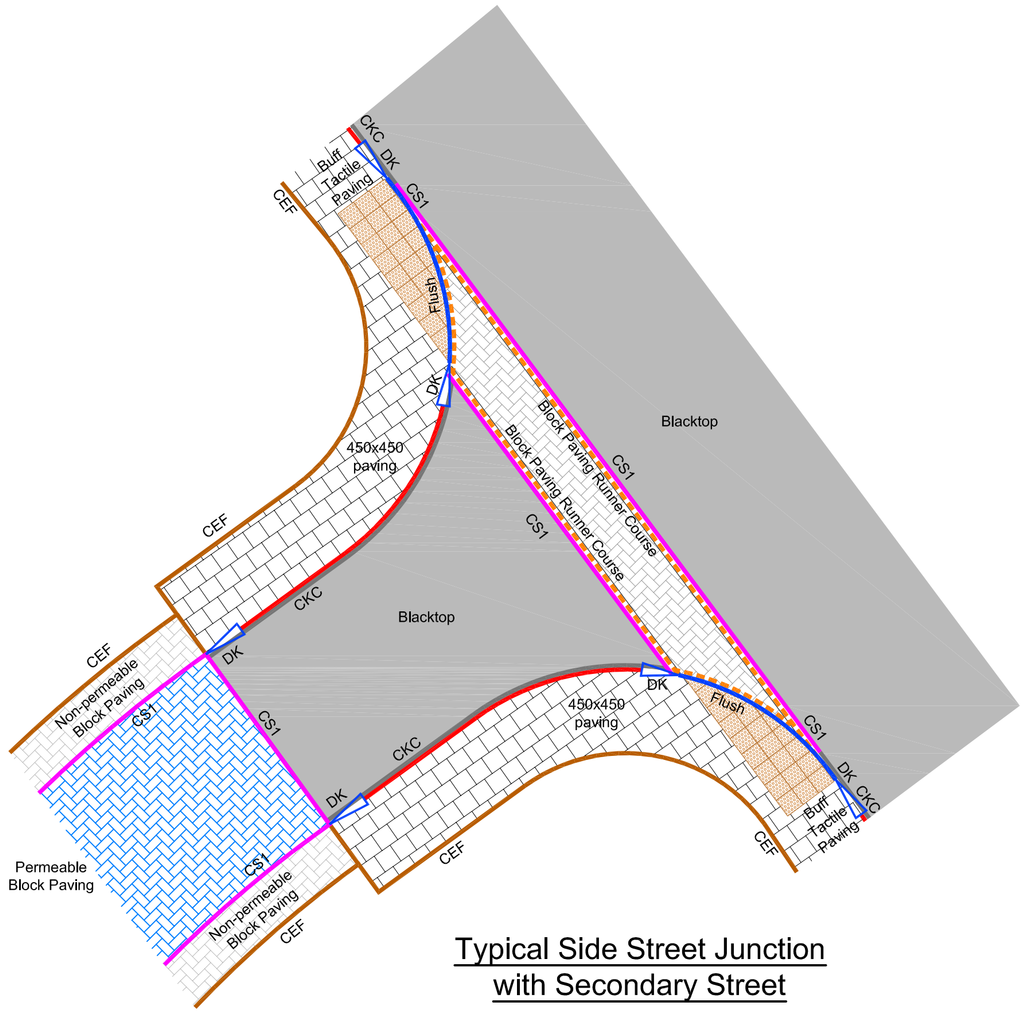

Typical Side Street Junction with Secondary Street

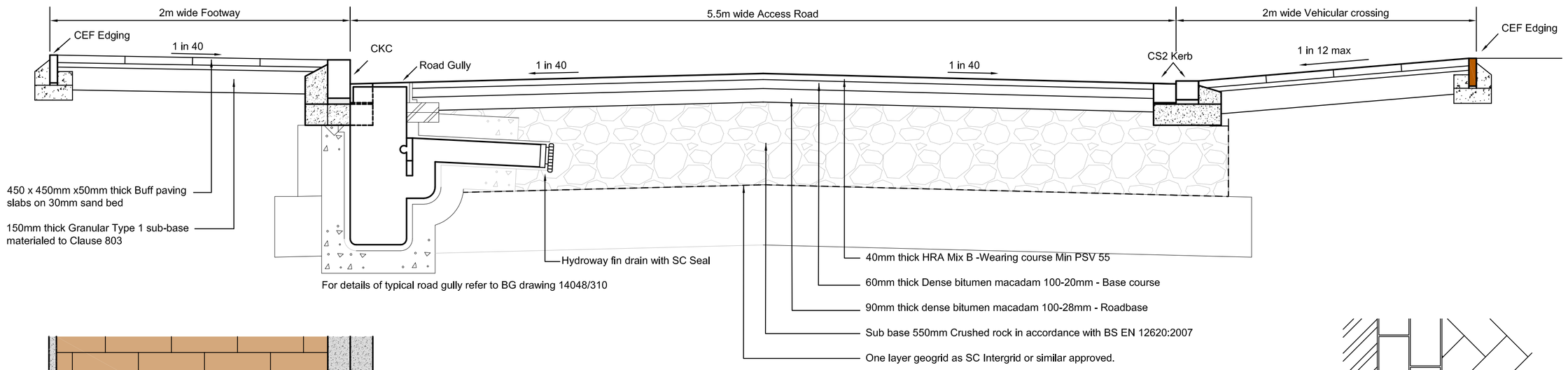

Typical Section through Access Road

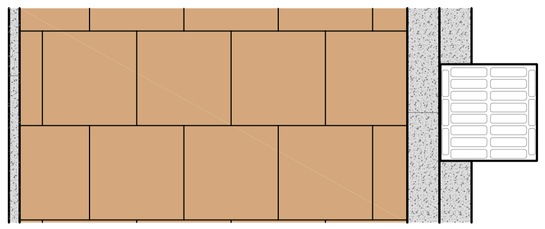

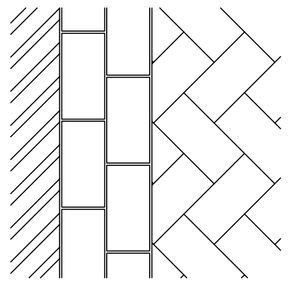

Edge Trim at Face of Buildings within Mews Court

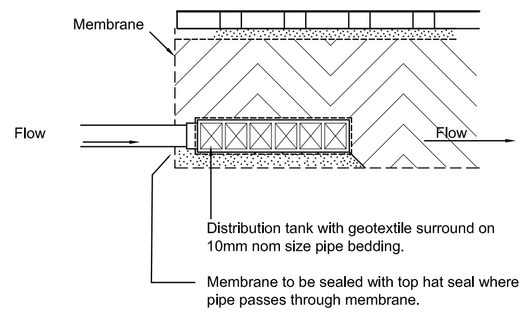

Typical Distribution Tank Detail

Where specified

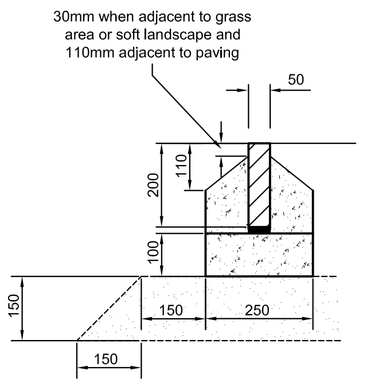

CEF Edging (CEF)

50 x 200mm Silver Grey Conservation flat top CEF Edging Type CEF on 10/20mm mortar bed with ST2 concrete bed and haunch. Min 150mm sub-base to be provided under all kerbs

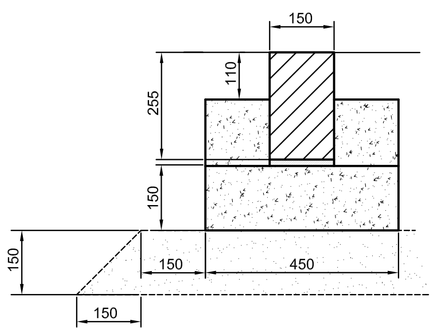

CS1 Kerb (CS1)

150 x 255mm Silver Grey Conservation kerb Type CS1 on 10/20mm mortar bed with ST2 concrete bed and haunch. Min 150mm sub-base to be provided under all kerbs

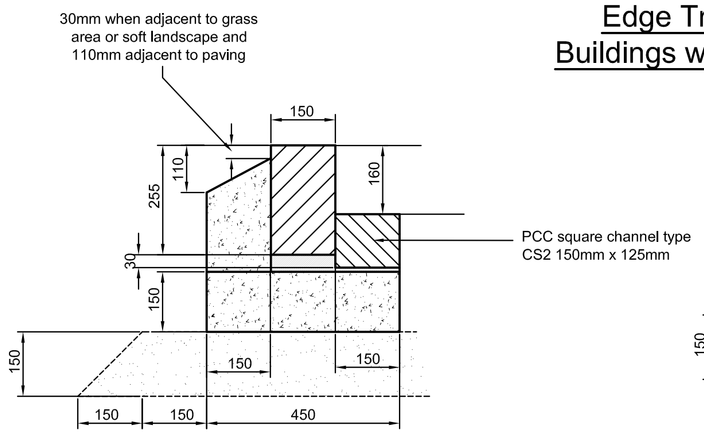

Conservation kerb and Channel (CKC)

150 x 255mm Silver Grey Conservation kerb on 40mm mortar bed with ST2 concrete bed and haunch. Min 150mm sub-base to be provided under all kerbs

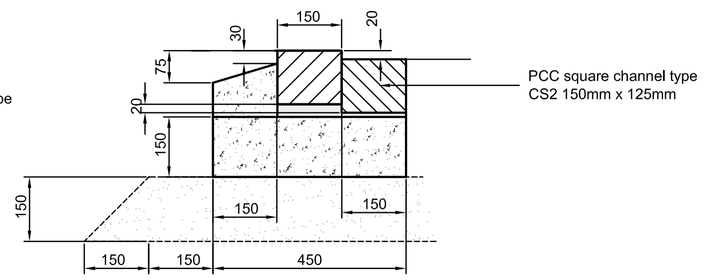

CS2 Kerb (CS2)

150 x 125mm Silver Grey Conservation kerb Type CS2 on 30mm mortar bed with ST2 concrete bed and haunch. Min 150mm sub-base to be provided under all kerbs

The Contractor is to check and verify in conjunction with the Architects details all setting out points, building and site dimensions, levels and sewer invert levels at connection points and ensure that they are fully conversant with the contents and of requirements the site investigation report before work starts.
The Contractor is to comply in all respects with current building legislation, British Standard Specifications, Building Regulations etc.,whether or not specifically stated on this drawing.

This drawing is not intended to show details of ground conditions or ground contaminants. Each area of ground relied upon to support any structure depicted (including drainage) must be investigated by the Contractor any areas of formation for said structures which do not accord with the anticipated conditions as described in the site investigation report are to be immediately notified to the Engineer, where applicable. Any suspect fluid ground or ground contaminants on or within the ground should be further investigated by a suitable expert. Any earthworks shown indicate typical slopes for guidance only and should be Investigated further by a suitable geotechnical expert.

Where existing trees are shown to be retained they should be subject to a full Arboricultural Inspection for safety. All trees are to be planted so as to ensure they are a minimum of 5 metres from buildings and 3 metres from drainage and services, where applicable. A foundation is to be provided to accommodate the proposed tree planting, where applicable.

© This drawing and the building works depicted are the copyright of Banners Gate Ltd and may not be reproduced or amended except by written permission. No liability will be accepted for amendments made by other persons.

Notes:-

1. All details required in the construction of adoptable highways are to be in accordance with Oxfordshire County Council Highways Specification.

2. Hand laying of bituminous materials is not permitted on adoptable carriageway.

3. 150 x 50mm back CEF Edging kerbs will be laid upturned and flush at footway crossovers and verges.

4. CBR values and calculations may be required to determine sub-base thickness.

5. The maximum upstand of any block within the rumble strip shall be 6mm.

6. All substrata structures and unconsolidated material, within the construction width of the highways, are to be removed.

Table 1 The sub base thickness shall be adjusted in accordance with the following table according to measured in-situ CBR results.

CBR value	Adjustment to Sub-base thicknesses
4% or greater	No adjustment
3% to 4%	+ 100mm
2% to 3%	+ 200mm
Less than 2%	Sub grade improvement required

Table 2 Laying course material specification

Sieve size	% passing
14mm	100
10mm	90-100
6.3mm	80-99
2mm	0-20
1mm	0-5

PRELIMINARY

Please note whilst these drawings may be used for tender purposes, drawings are subject to Oxfordshire County Council approval as part of ongoing consultations and design check. Amendments may therefore be requested.

Rev.	Description	Date	By
-	First Issue	09-02-15	SD

Client

Linden HOMES

Project

KMA & KMB Kingsmere
Bicester

Title

Adoptable Highway Construction Details

BANNERS GATE
CIVIL, STRUCTURAL & ARCHITECTURAL DESIGN SERVICES
10-11 Birmingham Street, Halesowen, West Midlands B63 3HN
Tel: 0121 687 1500 Fax: 0121 687 1501
E-mail: mail@bannersgate.com

Scale	Not To Scale	Drawn	WJI
Date	Feb 2015	Checked	DA
File	14048 - civils	Drawing	14048 / 300