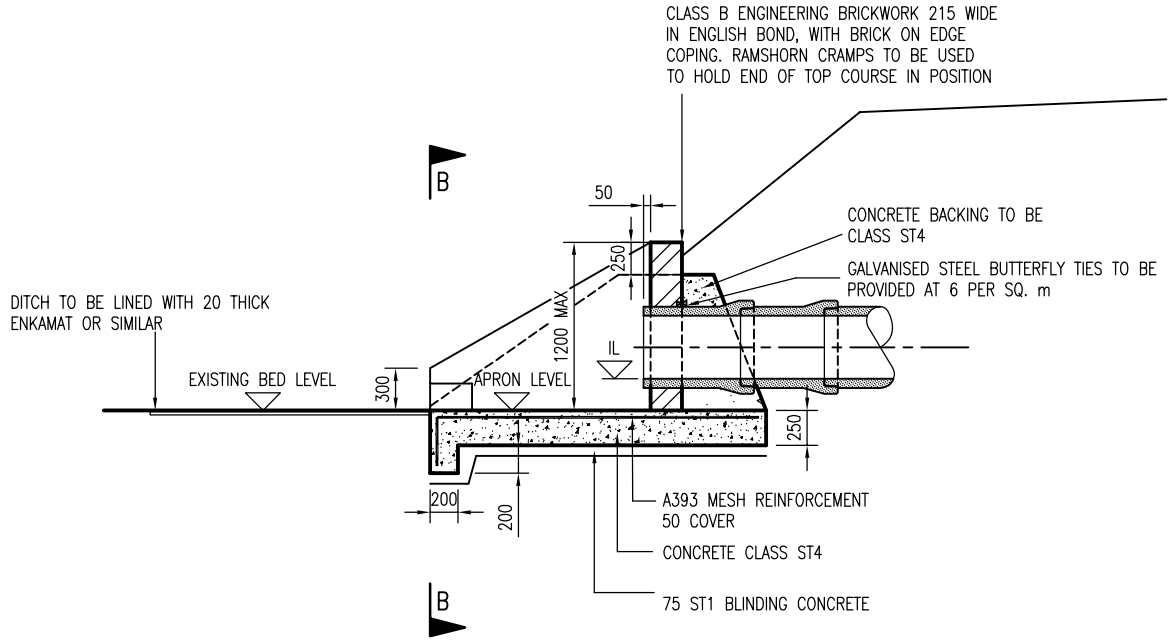

SECTION A–A

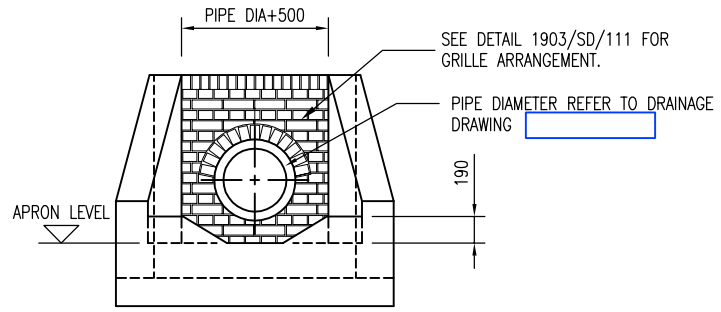

SECTION B–B

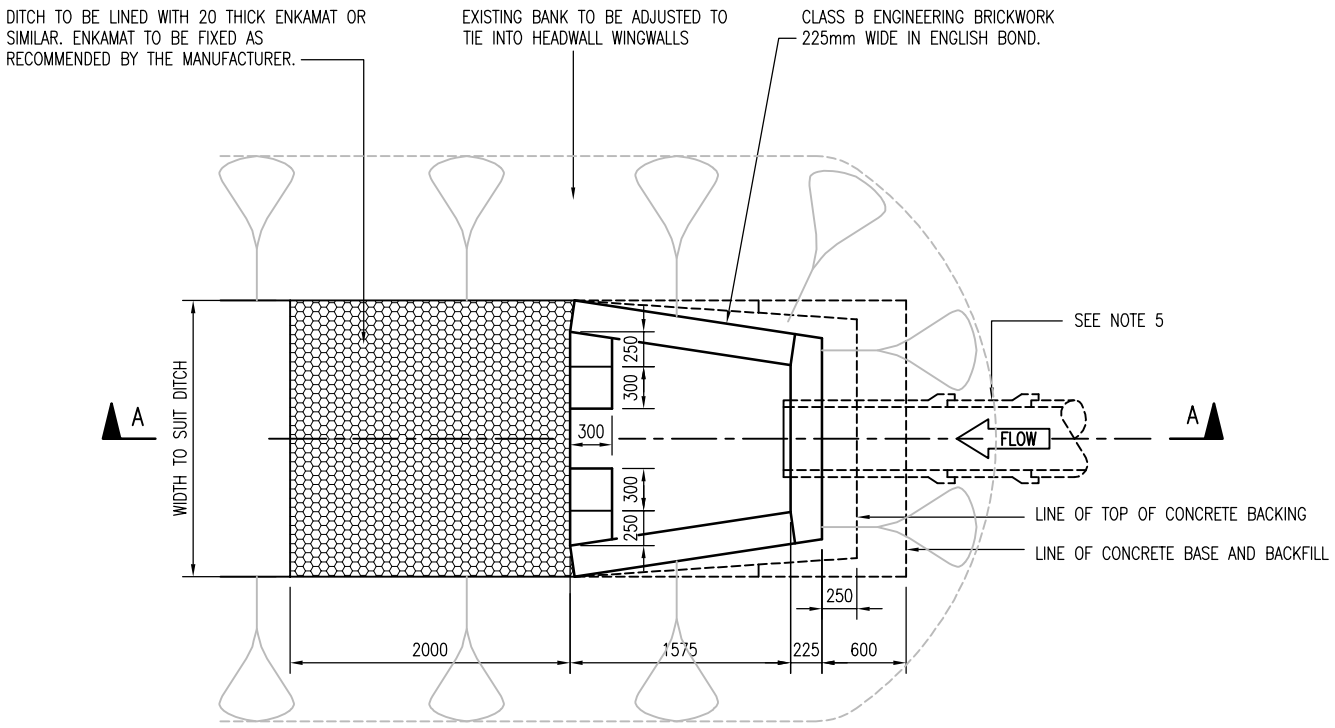

PLAN

ROCKER PIPE LENGTHS:

NOMINAL DIAMETER (mm)	EFFECTIVE LENGTH (mm)
150–600	600
675–750	1000

DO NOT SCALE

NOTES

1. THIS DRAWING IS TO BE READ IN CONJUNCTION WITH ALL OTHER RELEVANT SCHEME DRAWINGS AND SPECIFICATIONS.
2. ALL DIMENSIONS ARE IN MILLIMETRES UNLESS OTHERWISE STATED.
3. FOR APRON AND INVERT LEVELS REFER TO DRAINAGE DRAWING
4. REFER TO STANDARD DETAIL 1903/SD/110 (DRAINAGE NOTES)

REV	DATE	BY	DESCRIPTION	CHK	APD
B	12/12/08	JH	ISSUED FOR TECHNICAL APPROVAL	KW	JAM
A	28/05/08	PJ	FIRST ISSUE	LH	JM

DRAWING STATUS: FOR TECHNICAL APPROVAL

WSP
Mountbatten House, Basing View, Basingstoke, Hampshire RG21 4HJ
Tel: +44 (0)1256 318800 Fax: +44 (0)1256 318700
http://www.wspgroup.com

CLIENT: COUNTRYSIDE PROPERTIES

ARCHITECT:

PROJECT: SOUTH WEST BICESTER
BICESTER, OXFORDSHIRE

TITLE: ON SITE WORKS
HEADWALL - TYPE 2
MAX. 1.2m HIGH

SCALE @ A3:	CHECKED:	APPROVED:
1:50	LH	JM
CAD FILE: 1903-SD-110	DESIGN-DRAWN: PJ	DATE: January 2008

PROJECT No:	DRAWING No:	REV:
11011903	1903/SD/110	B

© WSP Group plc

N:\Bicester New Town\DRAWINGS\AUTOCAD\SD Standard Details\1903-SD-110.dwg 11/12/2008 15:10:50 Hardy, Jonathan