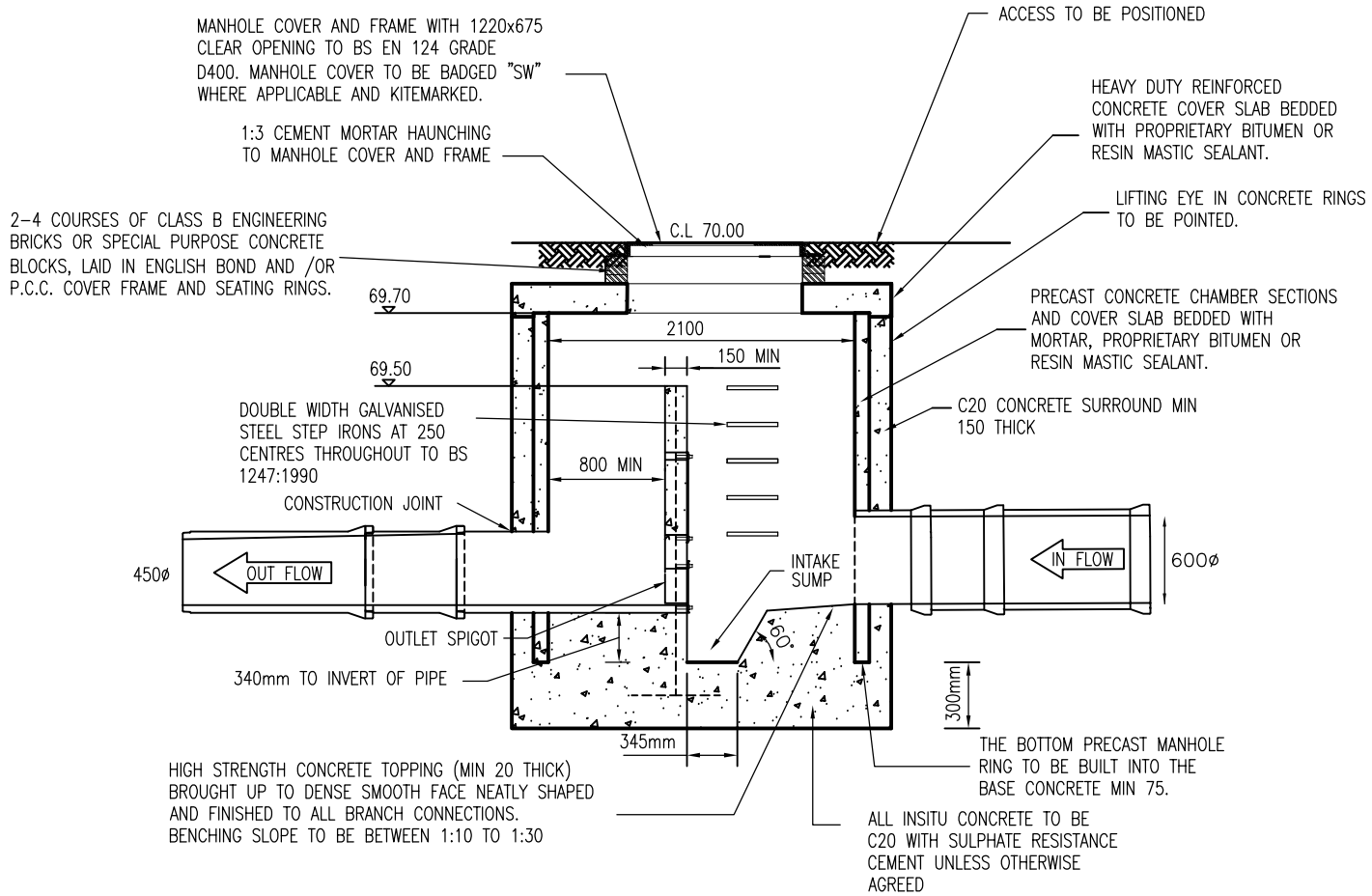

SECTION A – A

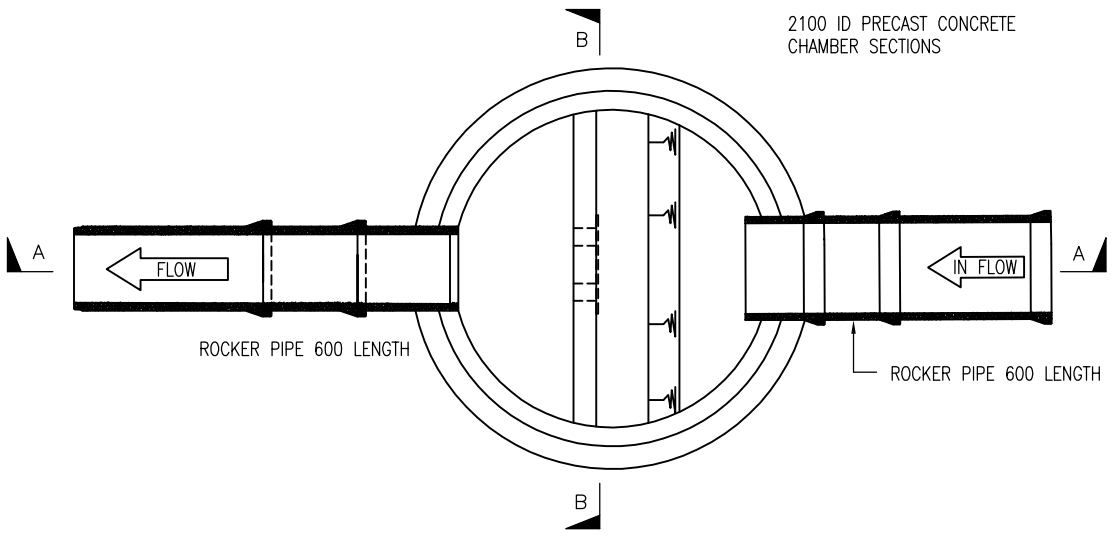

PLAN FLOW CONTROL MANHOLE

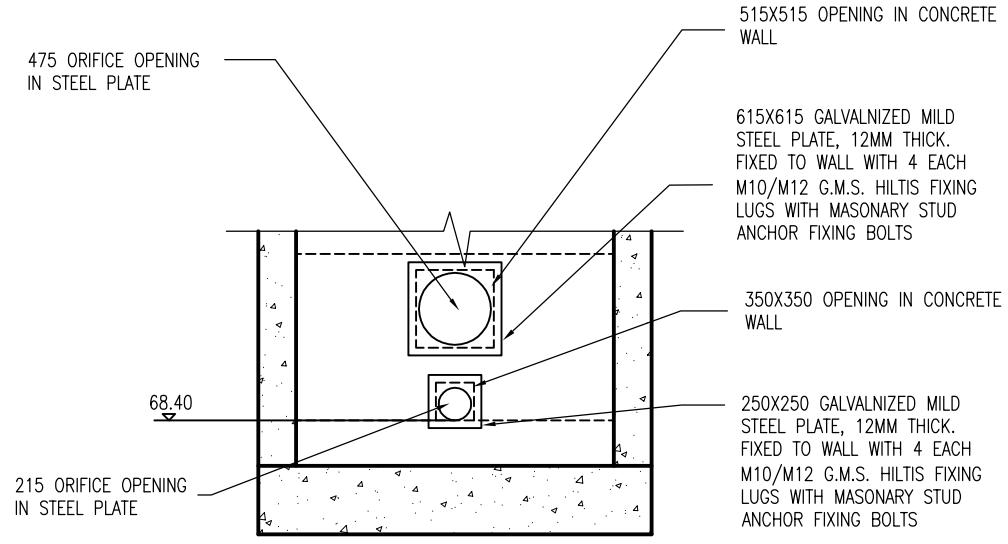

SECTION B – B

DO NOT SCALE

NOTES

1. ALL DIMENSIONS IN MILLIMETRES UNLESS OTHERWISE STATED.

REV	DATE	BY	DESCRIPTION	CHK	APD
A	05/12/08	JH	ISSUED FOR TECHNICAL APPROVAL	JAM	GH

DRAWING STATUS: FOR TECHNICAL APPROVAL

WSP
Mountbatten House, Basing View, Basingstoke, Hampshire RG21 4HJ
Tel: +44 (0)1256 318800 Fax: +44 (0)1256 318700
http://www.wspgroup.com

CLIENT: COUNTRYSIDE PROPERTIES

ARCHITECT:

PROJECT: SOUTH WEST BICESTER
BICESTER, OXFORDSHIRE

TITLE: ONSITE WORKS
FLOW CONTROL MANHOLE

SCALE @ A3:	CHECKED:	APPROVED:
1:50	JAM	GH
CAD FILE: 1903-SD-118	DESIGN-DRAWN: JH	DATE: Dec-08

PROJECT No:	DRAWING No:	REV:
11011903	1903/SD/118	A

© WSP Group plc

N:\Bicester New Town\DRAWINGS\AUTOCAD\SD Standard Details\1903-SD-118.dwg 05/12/2008 15:35:03 Jewkes, Ryan