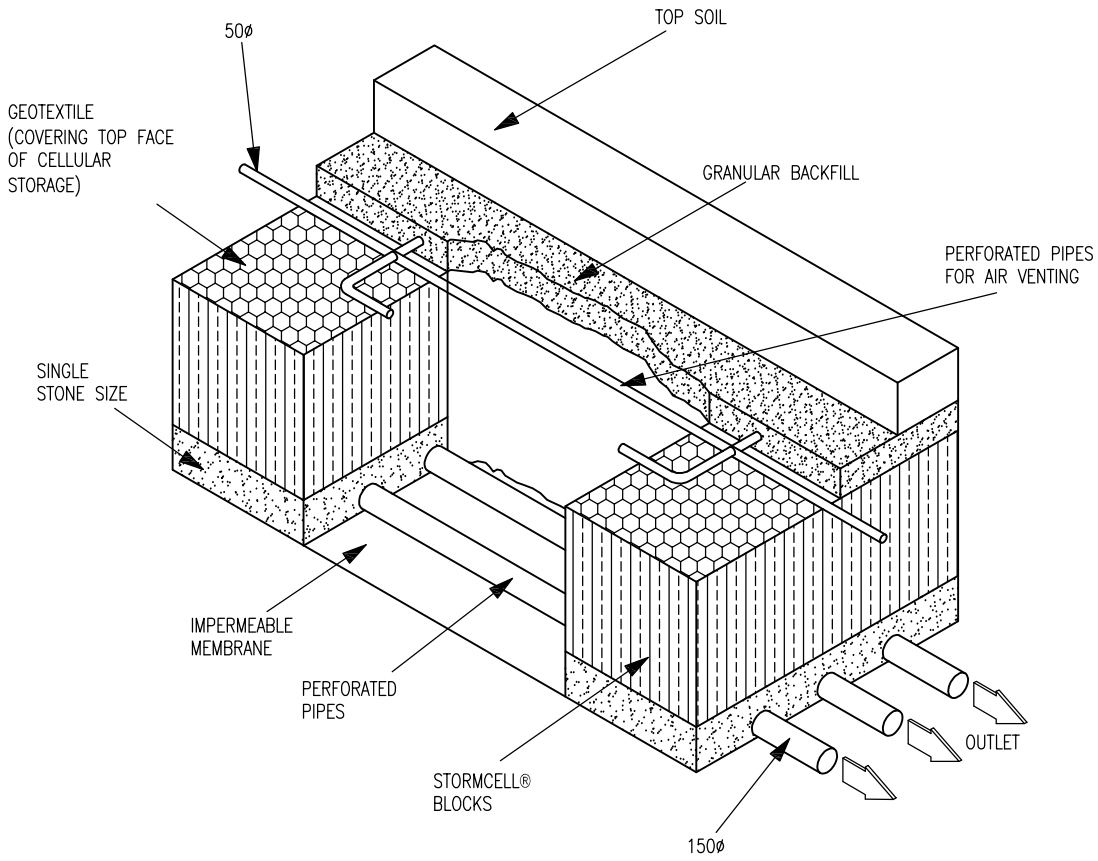

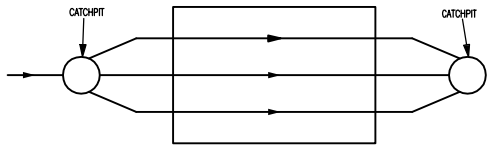

ARRANGEMENT IN PARALLEL

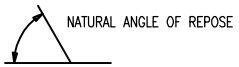

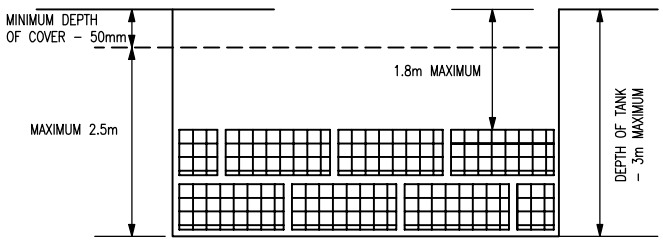

RECOMMENDED DEPTH LIMITS IN THE VERTICAL PLANE

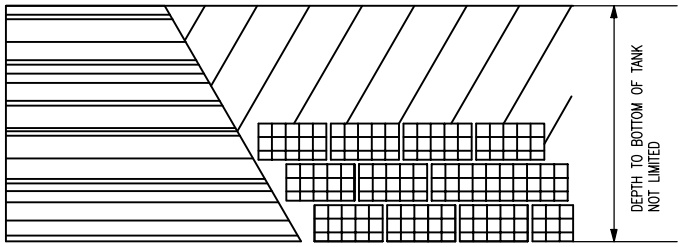

DEPTH LIMITATIONS IN SLOPED EXCAVATION

WSP

TITLE:

TANKED CELLULAR STORAGE
DETAIL

FIGURE No:

4

N:\SOUTH WEST BICESTER\DRAWINGS\AUTOCAD\Figures\FRA\1546-FRA FIGURE 4